PCB Load & Torque Inc. claims proprietary rights in the information disclosed hereon. Neither it nor any reproduction thereof will be disclosed to others without the written consent of PCB Load and Torque Inc.

49932

REVISIONS		
REV	DESCRIPTION	ECO
E	CONNECTOR WAS PT02A - 06.06.16. PTE	45560

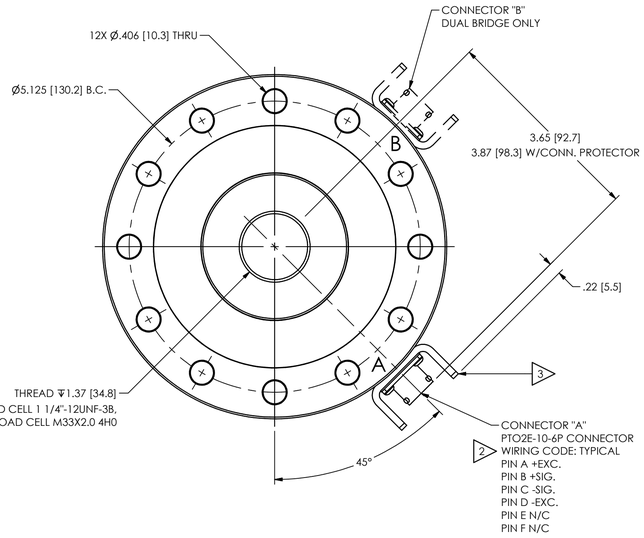

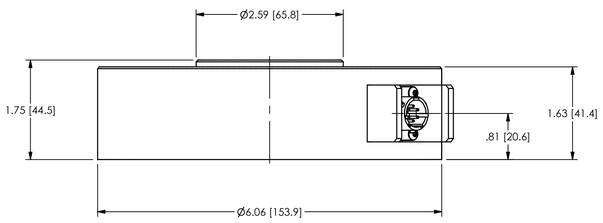

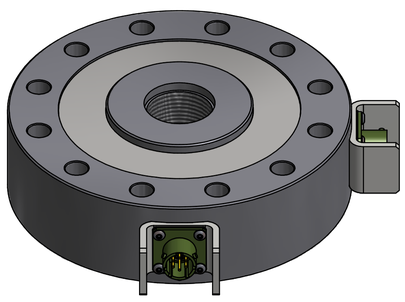

1204, M1204, 1404 AND M1404 SERIES LOAD CELLS INCLUDING DUAL BRIDGE

3 MODEL 084A901 CONNECTOR PROTECTOR SHOWN:
OPTIONAL ON ALL 1204/M1204 SERIES AND 1404/M1404 SERIES SINGLE BRIDGE LOAD CELLS
STANDARD ON ALL 1404/M1404 SERIES DUAL BRIDGE LOAD CELLS

2 WIRING CODE FOR "T" SERIES LOAD CELLS
PIN A +EXC.
PIN B +SIG.
PIN C -SIG.
PIN D -EXC.
PIN E TEDS DATA
PIN F TEDS GROUND

1 SUPPLIED WITH MATING FASTENERS

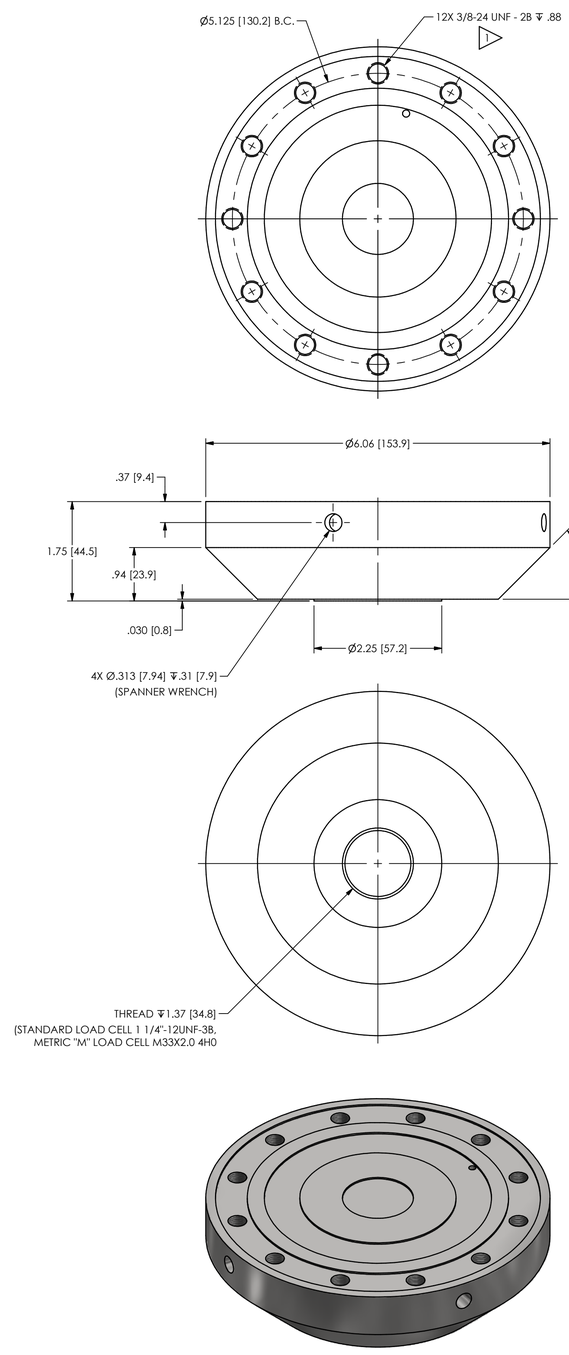

1204, M1204, 1404 AND M1404 SERIES BASES

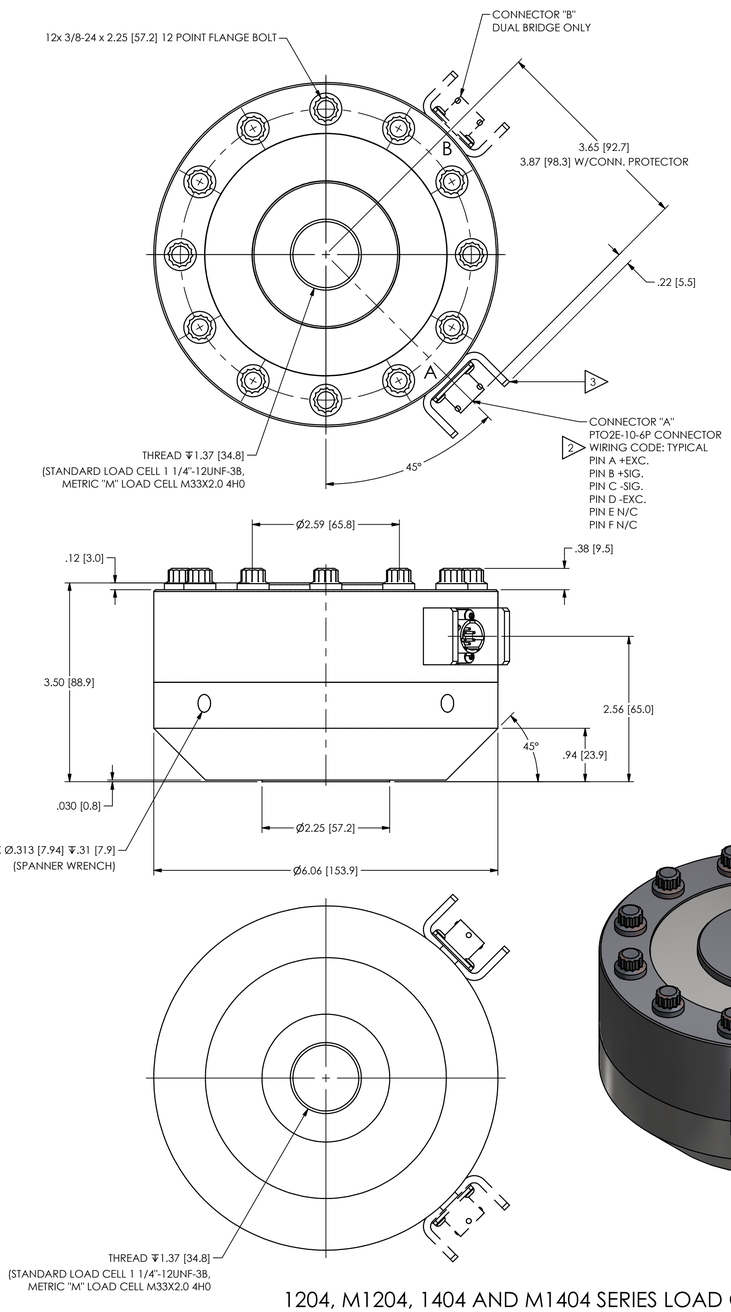

1204, M1204, 1404 AND M1404 SERIES LOAD CELLS W/BASES INCLUDING DUAL BRIDGE

UNLESS OTHERWISE SPECIFIED TOLERANCES ARE:		DRAWN		CHECKED		ENGINEER	
DIMENSIONS IN INCHES	DIMENSIONS IN MILLIMETERS [IN BRACKETS]	MDF	11.21.11	JDM	11.21.11	PTE	11.21.11
DECIMALS XX ±.01 XXX ±.005	DECIMALS X ±0.3 XX ±0.13	TITLE OUTLINE DRAWING 1204/1404 SERIES, PT CONNECTOR LOW PROFILE LOAD CELL					
ANGLES ± .5 DEGREES	ANGLES ± .5 DEGREES						
FILLETS AND RADII .015 MAX	FILLETS AND RADII 0.38 MAX						

PCB LOAD & TORQUE
A PCB GROUP COMPANY
24350 Indoplex Circle, Farmington Hills,MI 48335
(716) 684-0001 E-MAIL: lfinfo@pcbloadtorque.com

DWG. NO. 49932

SCALE: 3/4 SHEET 1 OF 1